soulbath

MAMPARAS de FÁBRICA

MAU

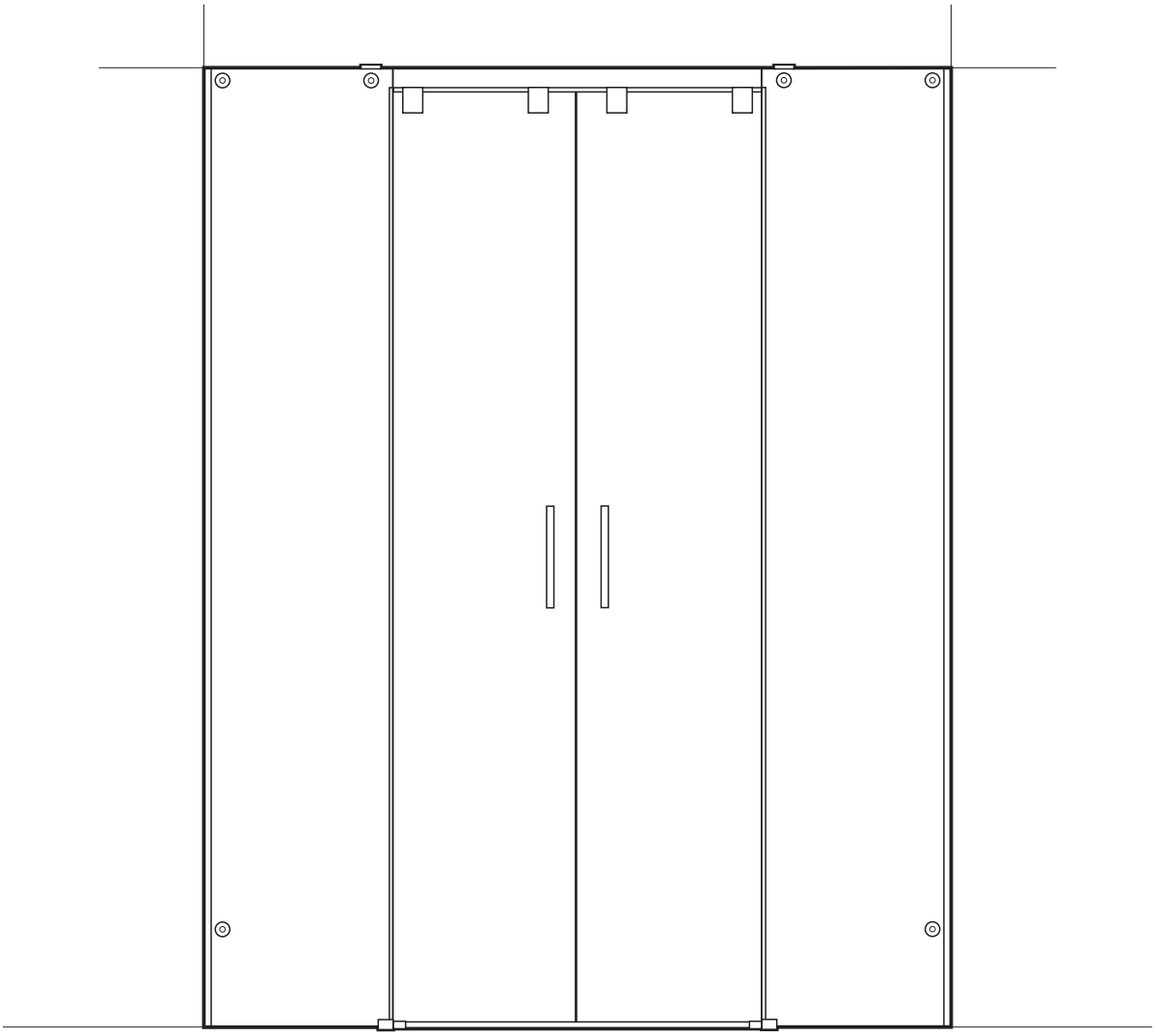

ISO 9001
BUREAU VERITAS
Certification

13

UNE-EN 14428

(ES)
(FR)
(EN)
(IT)
(DE)
(PT)

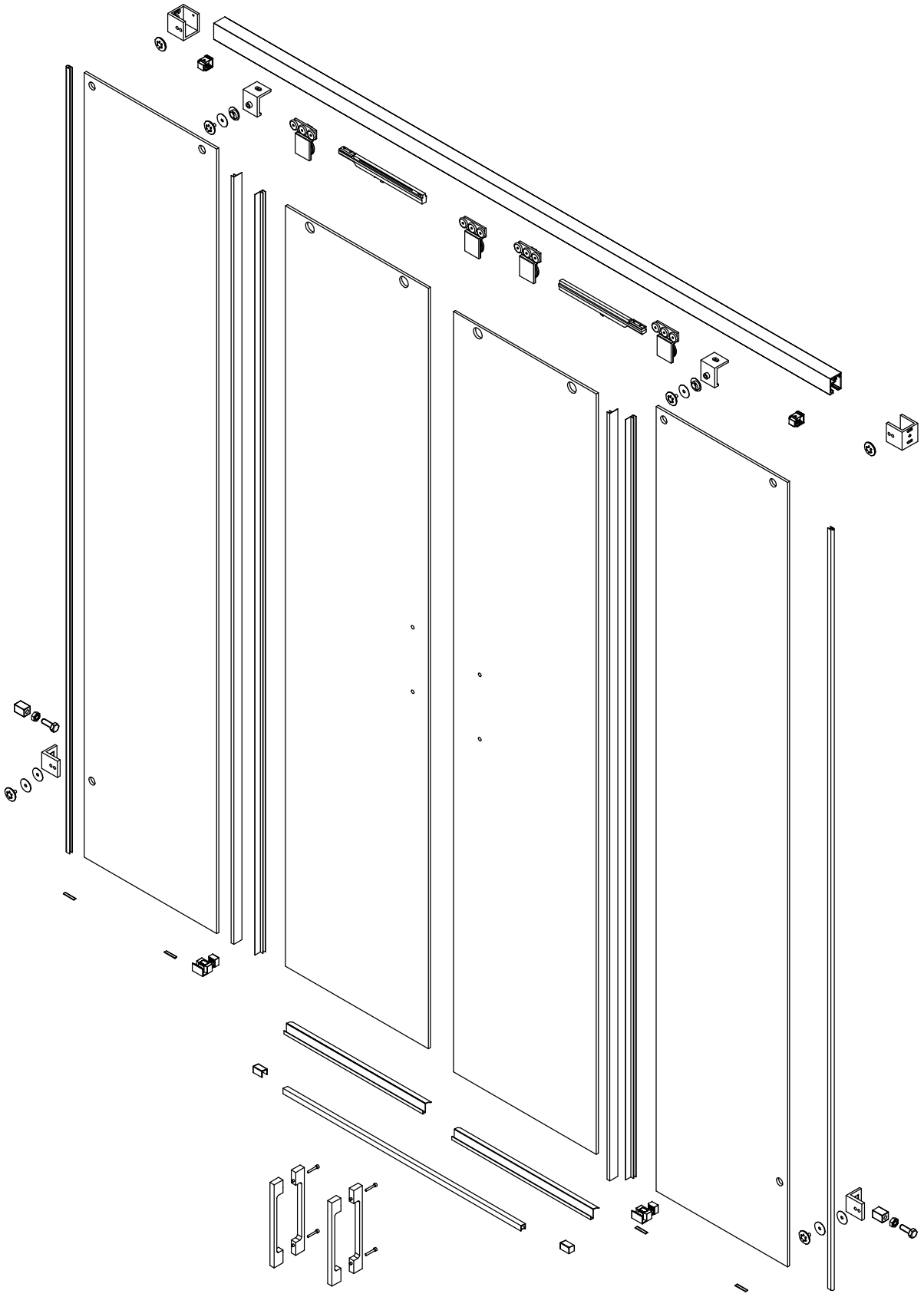

M-01		1	M-02		1
M-03		2	M-04		2
M-05		2	M-06		2
M-07		2	M-08		2
M-09		2	M-10		2
M-11		2	M-12		6
M-13		1	M-16		1
M-15		4	M-18		1
M-17		4	M-20		2
M-19		2	M-22		2
M-21	DIN 7982 4,2x16	3	M-24		6
M-23	DIN 7982 4,2x32	5	M-28		1
M-27		2			

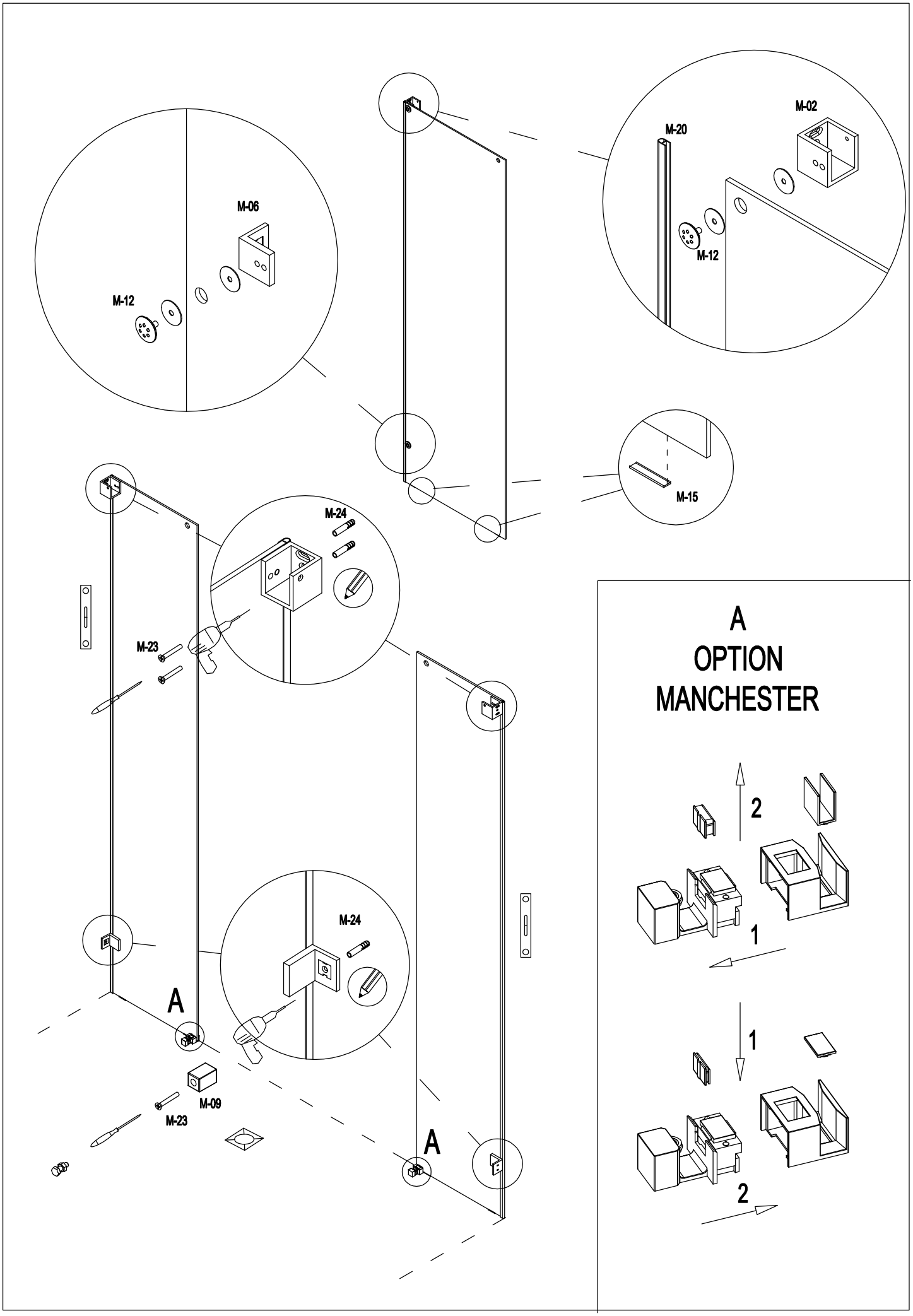
M-06
M-12
M-20
M-02
M-12
M-15
M-24
M-23
M-24
A
M-09
M-23
A
A
OPTION
MANCHESTER
2
1
1
2

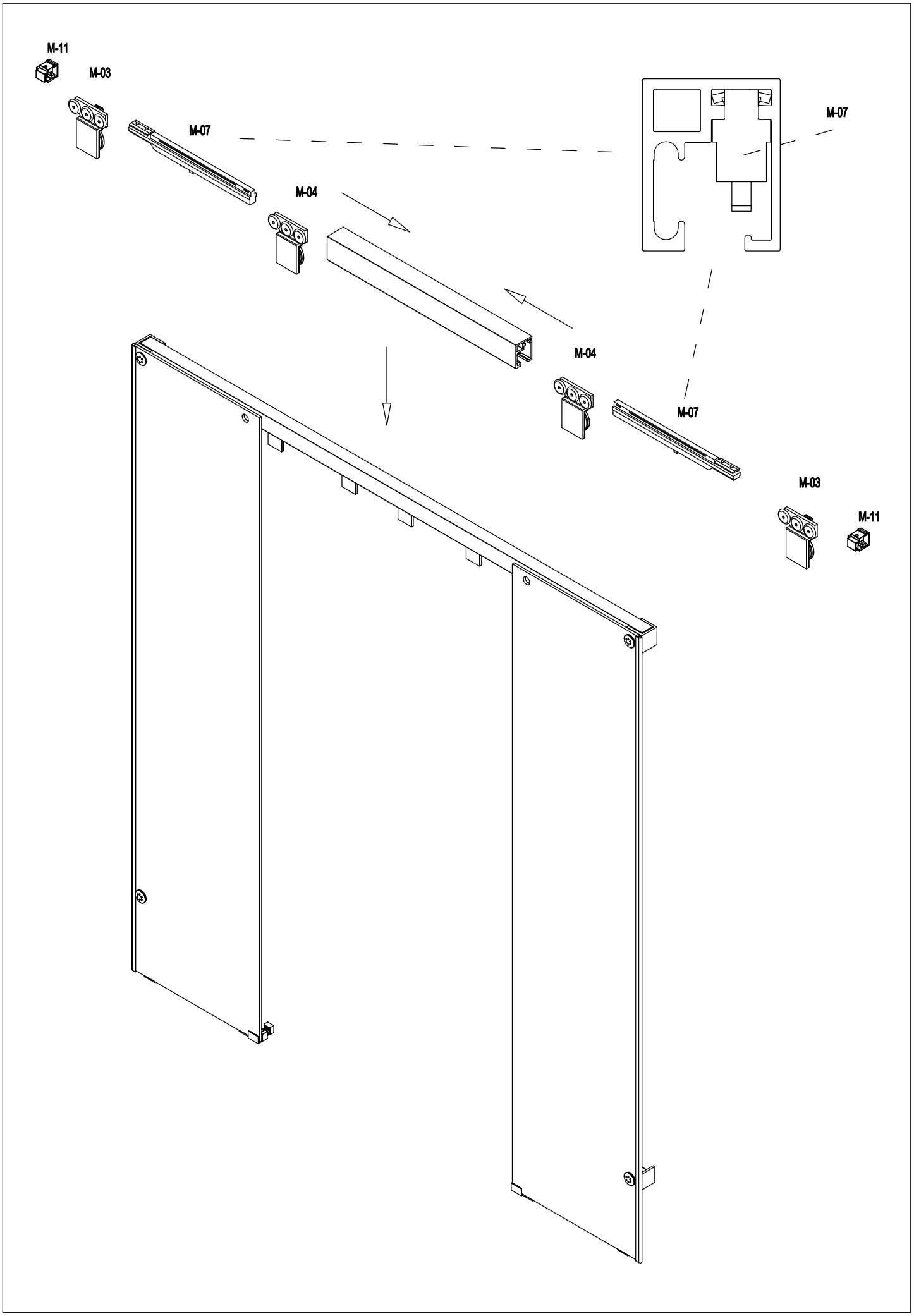
M-11
M-03
M-07
M-07
M-04
M-04
M-07
M-03
M-11

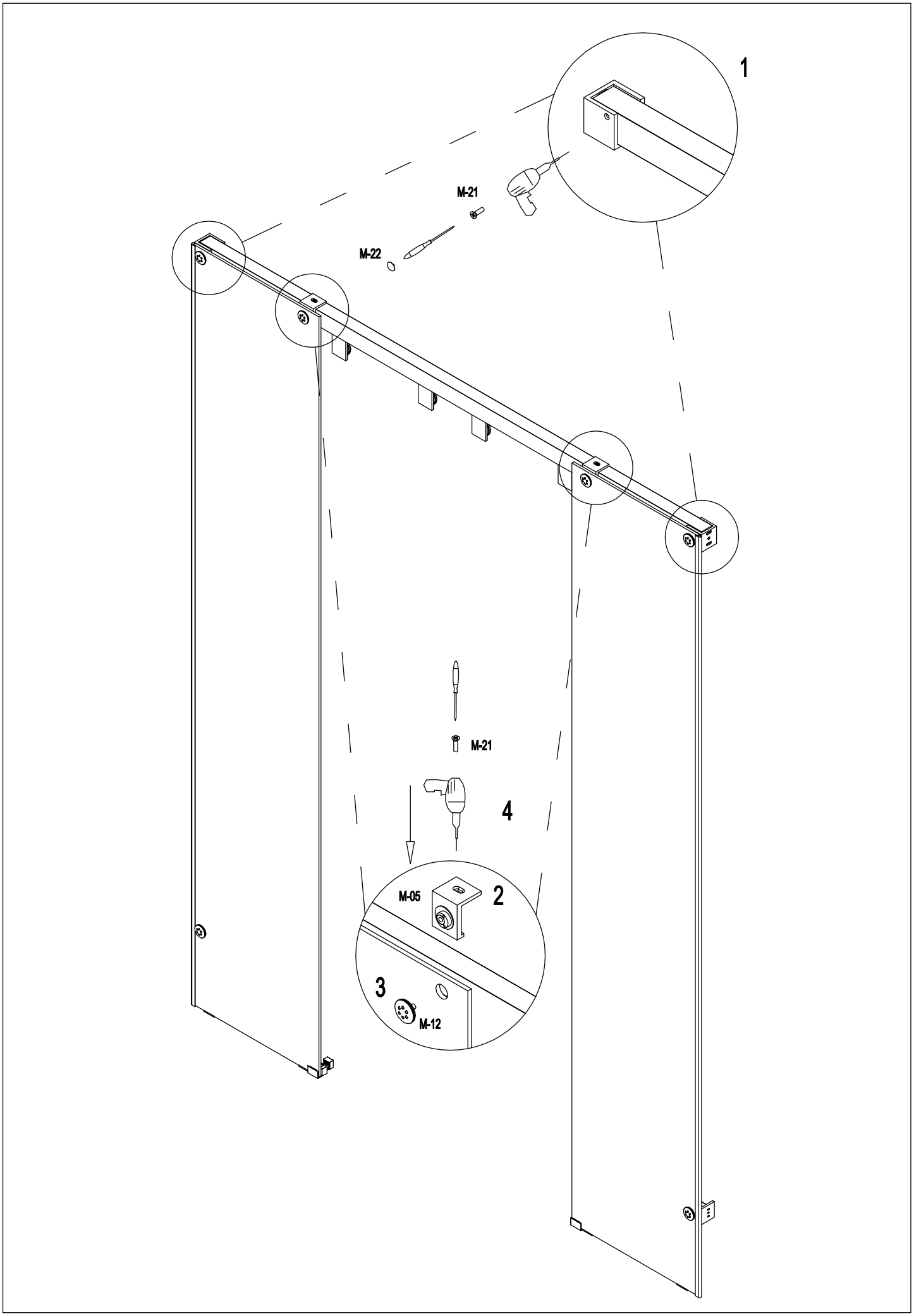
1
M-21
M-22
M-21
4
M-05
2
3
M-12

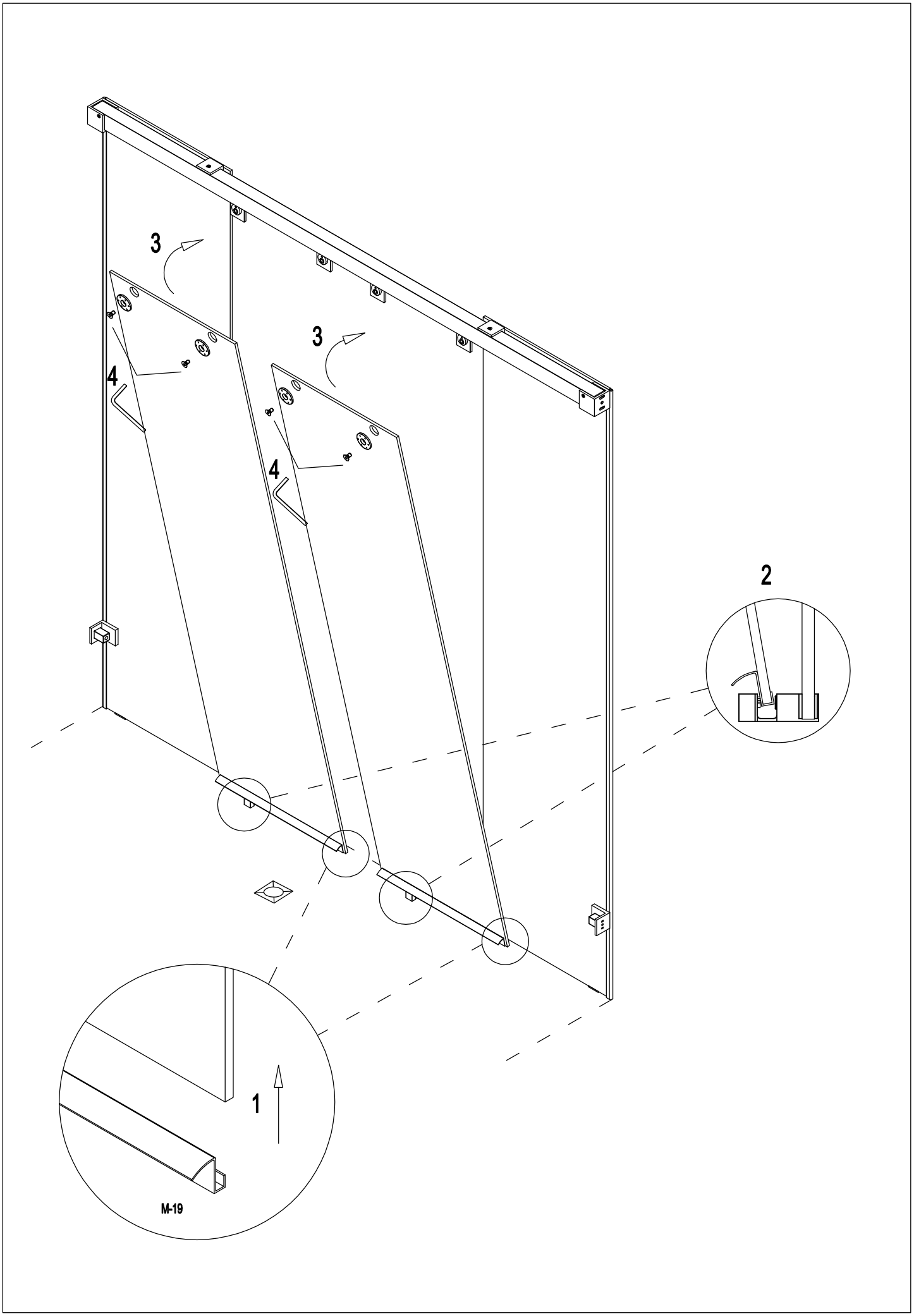
3
3
4
4
2
1
M-19

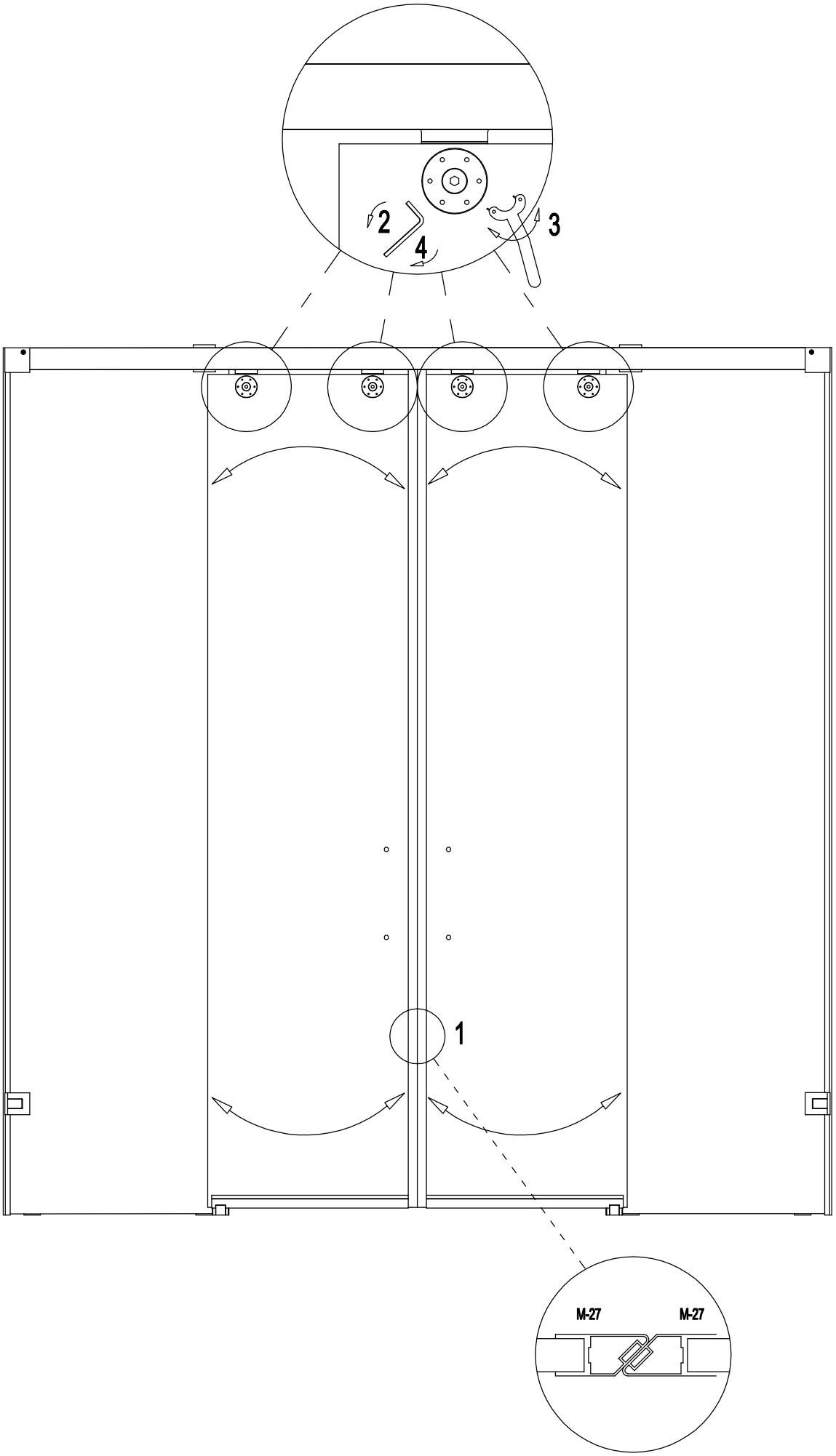
2
4
3
1
M-27
M-27

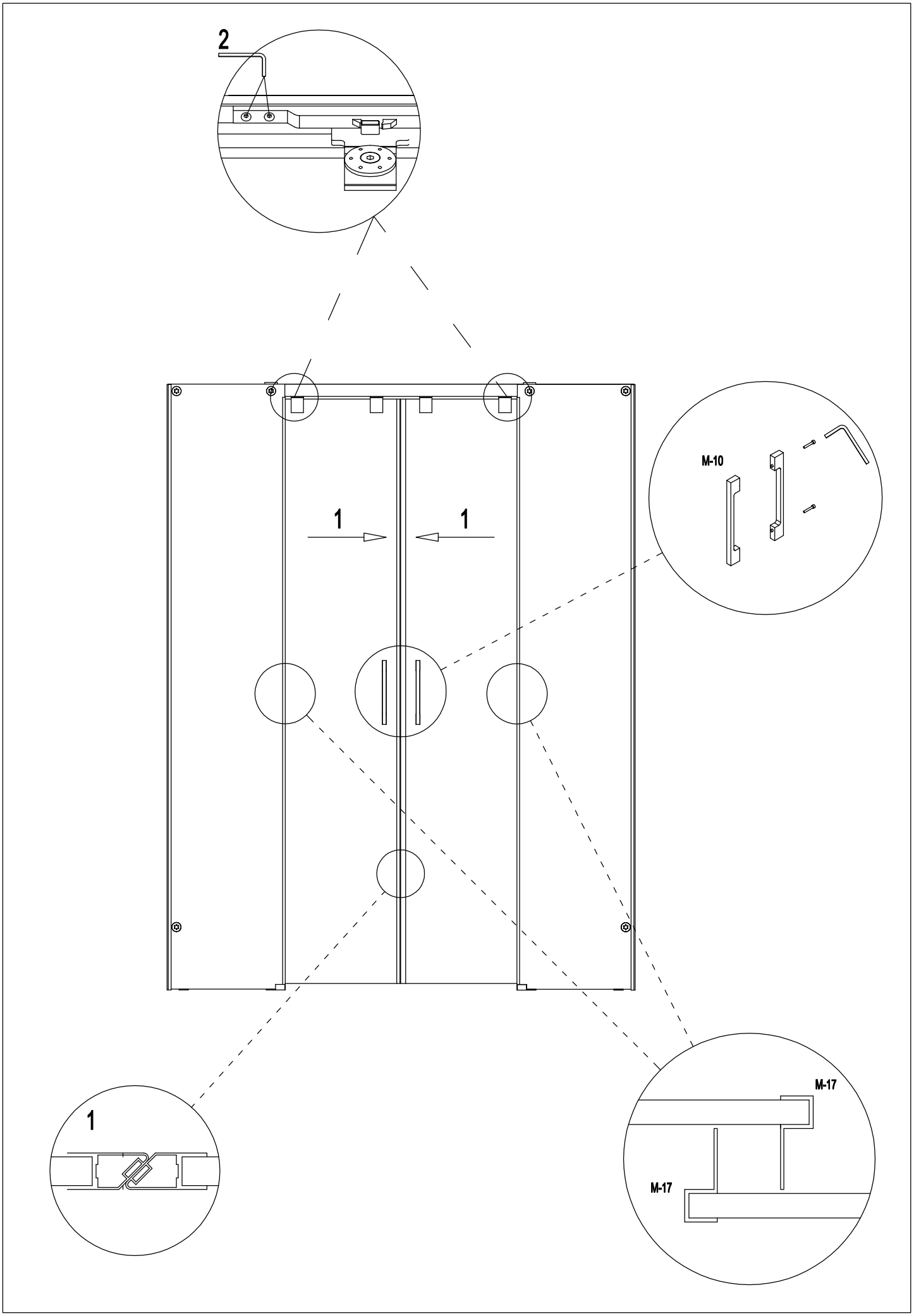
2
1
1
M-10
1
M-17
M-17

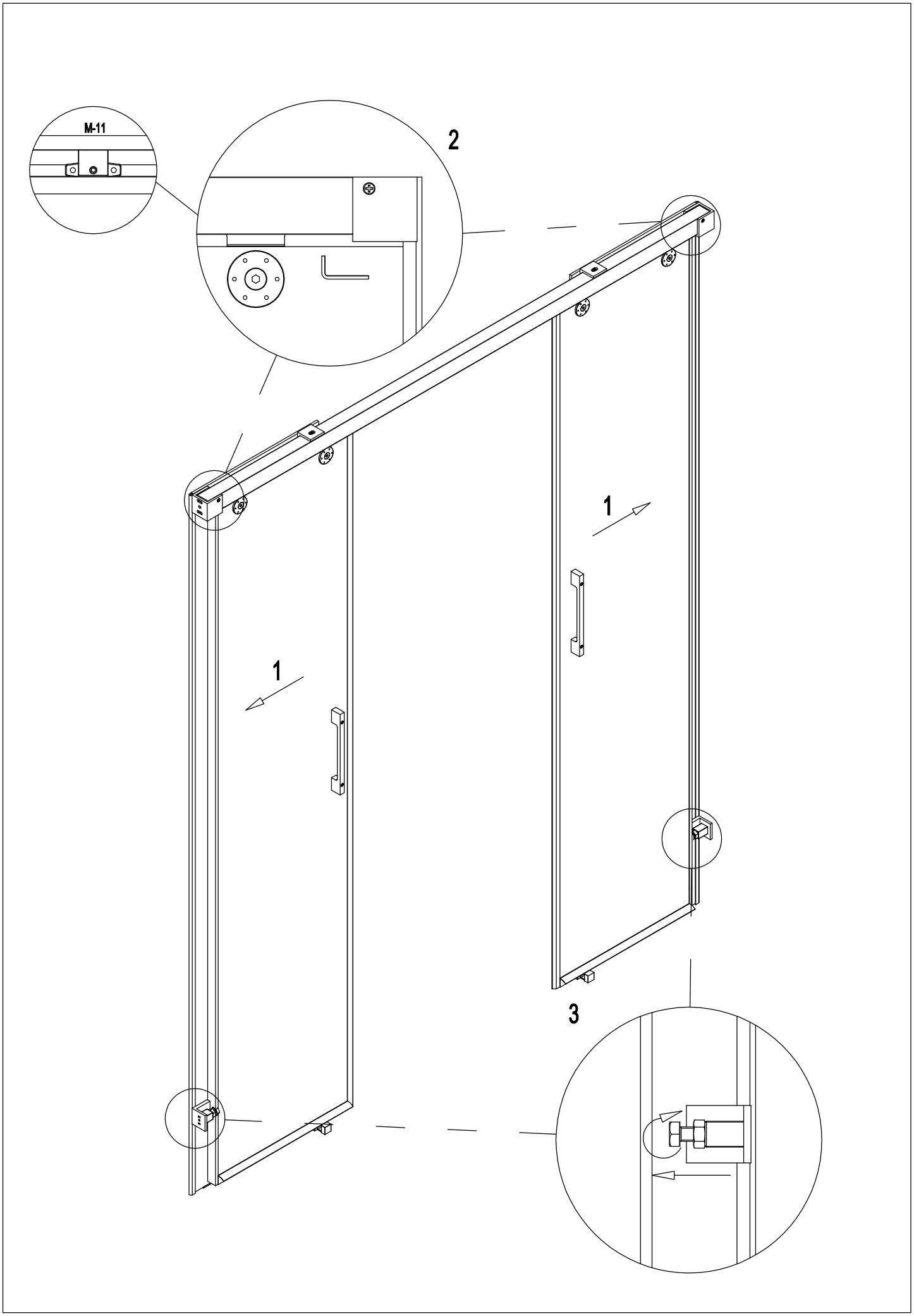
M-11
2
1
1
3

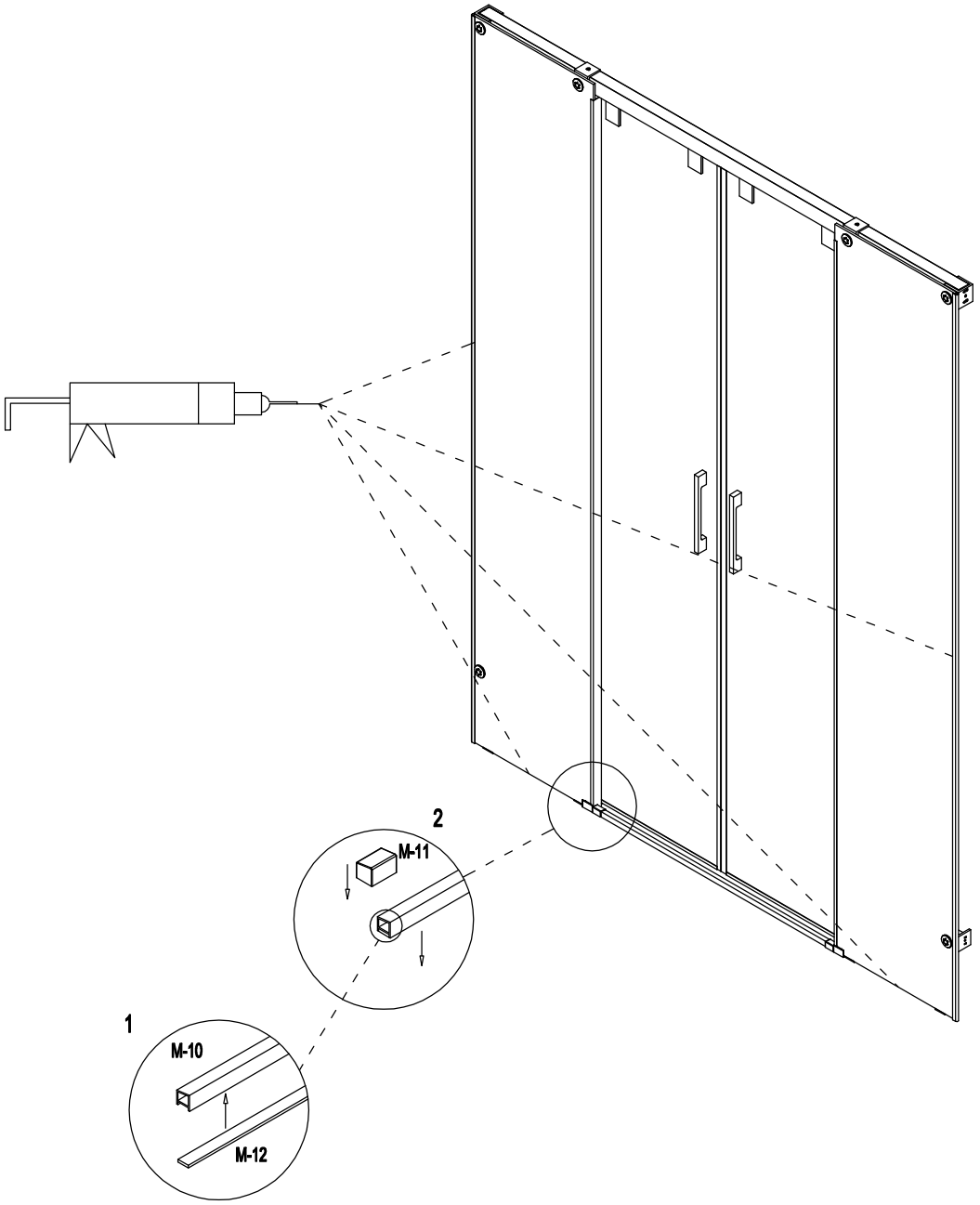
2
M-11
1
M-10
M-12

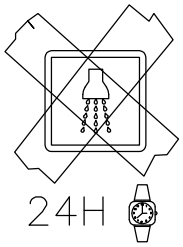
24H

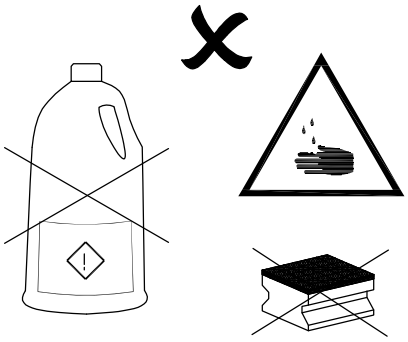

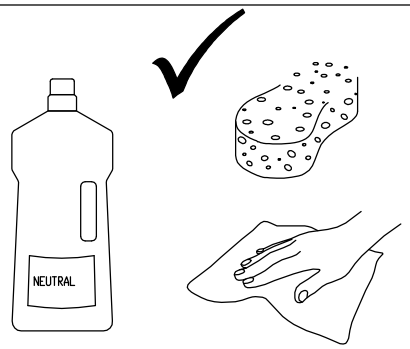
NEUTRAL